QC STORY PROJECT

PROJECT TITLE :- To reduce the consumption of electrode 08-904 in W-shop.

Mahindra and Mahindra Ltd, Plant I, Scorpio Body shop.

	Plan	Actual
Start Date	**29.06.12**	**20.7.12**
Completion Date	**22.08.12**	**30.09.12**

Current Status:

Completed

(Reduction in tip consumption by 50%)

Cross Functional Team

No	Description	Name	Designation	Dept	Phone	Email
1	Team Leader	**R.A.PUNDE**	ASST. MANAGER	SCORPIO BODYSHOP-Maintenance	9922228599	Punde.rajendra@mahindra.com
2	Mentor	**S.K.SALVE**	SR.MANAGER SCORPIO BODYSHOP	SCORPIO BODYSHOP - Maintenance	9922900891	Salve.sanjeev@mahindra.com
3	Member 1	**Sanket pimpalpure**	ASST. MANAGER	SCORPIO BODYSHOP –Prod.	9503500998	Pimpalpure.sanket@mahindra.com
4	Member 2	**Swapnl Dharrao**	ASST. MANAGER	SCORPIO BODYSHOP –Prod.	9765813801	Dharrav.swapnil@mahindra.com
5	Member 3	**Gokul Amrutkar**	Deputy Manager	SCORPIO BODYSHOP –Quality.	9922408133	Amrutkar.gokul@mahindra.com

1. Select the Theme

Brief description of Problem

What: **Consumption of electrode 08-904 is high.**

Where: **Roof stage spot welding guns**

When: **Monthly consumption**

Why: **Solid tip is using.**

How: **Comes in top 3 tip consumption items**

Electrode 08-904

2. Justify the choice (reasons)

Various tip/electrode cost consumption (F-12)

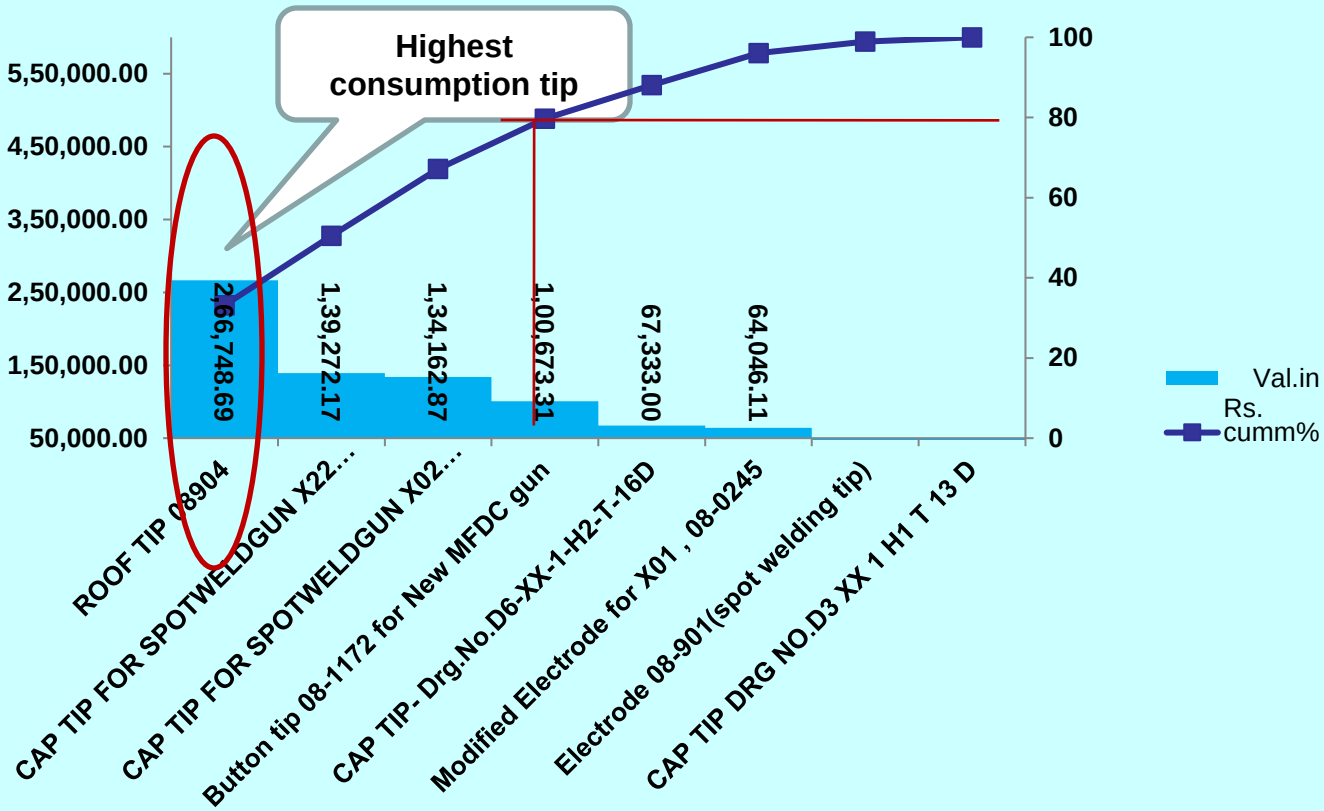

1) **This tip 08-904 is the highest contributor in all other tips.**

2.b Immediate Containment Action

NA

3. Understand the current situation

Observation of process

Cost of various Tips/electrode in shop

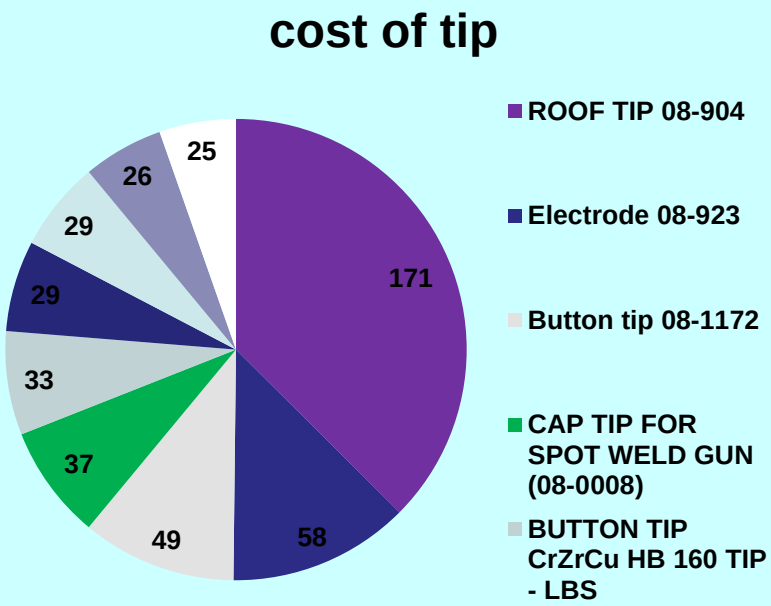

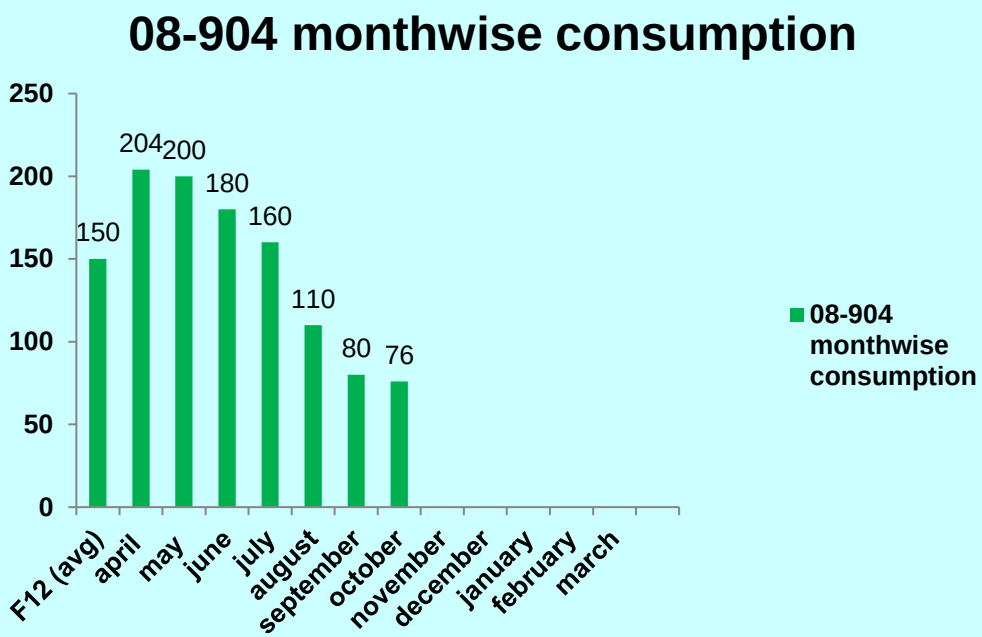

3. Understand the current situation

Roof stage C-29 gun tip is more mushrooming. Hence consumption is more. Also manufacturing of 08-904 tip is complicated. Electrode Cost is high(Rs.171).

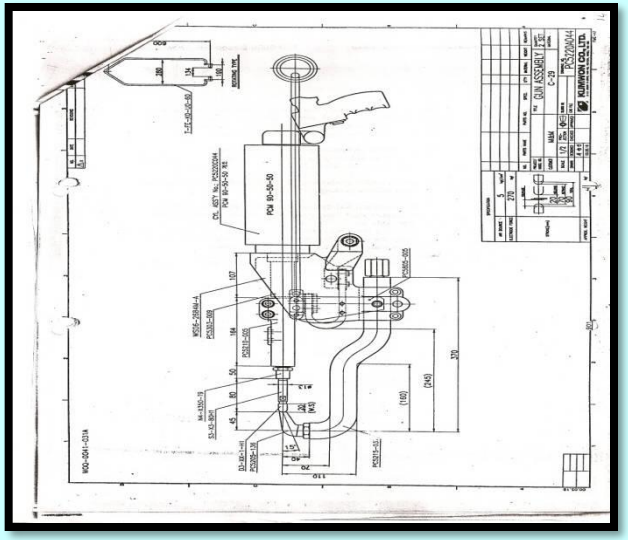

Spot welding gun C-29

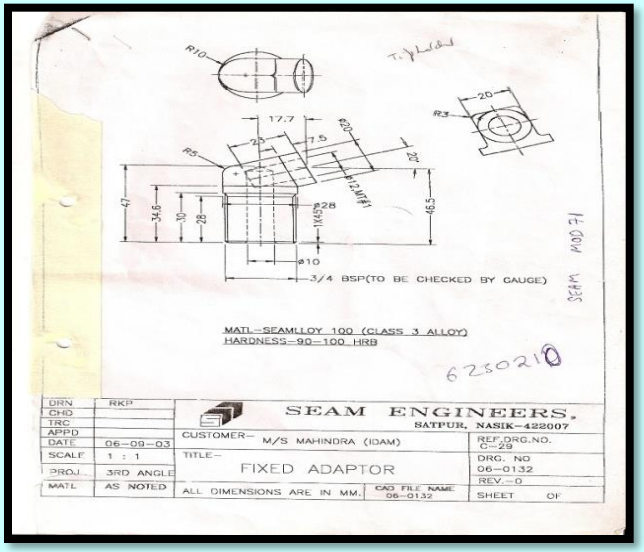

Holder 06-132

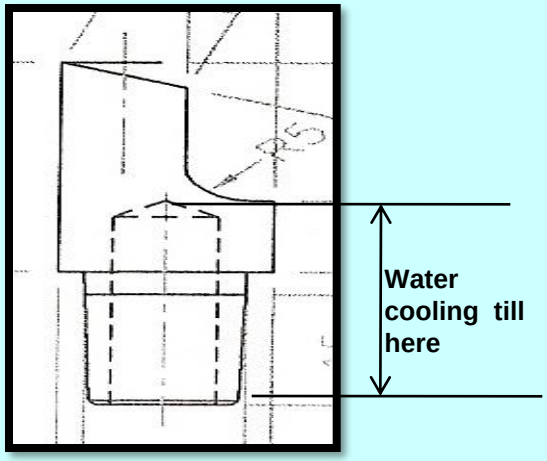

Solid Electrode 08-904

3. Understand the current situation

VARIOUS TYPE OF TIPS/ELECTRODE IN SHOP

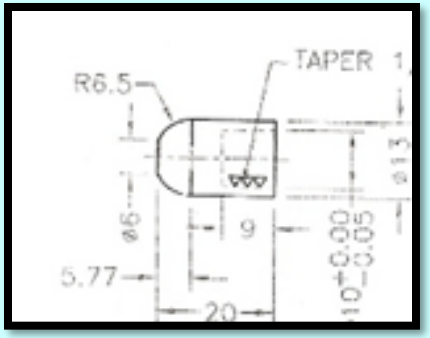

08-922

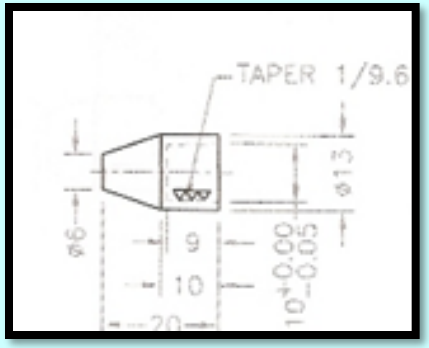

08-901

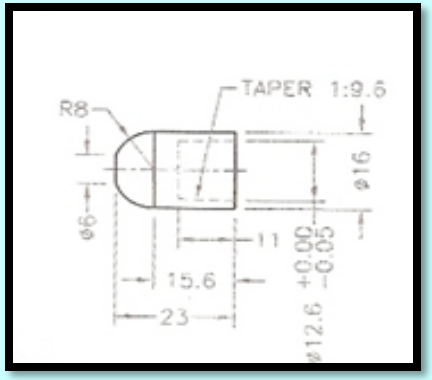

08-900

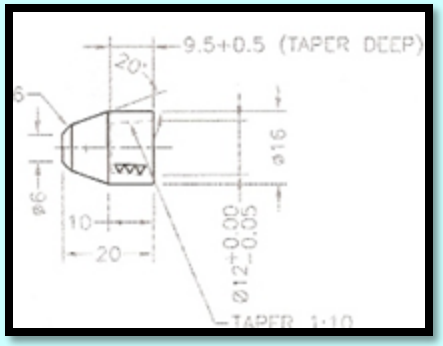

08-902

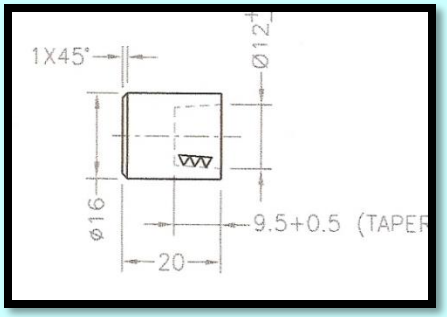

08-923

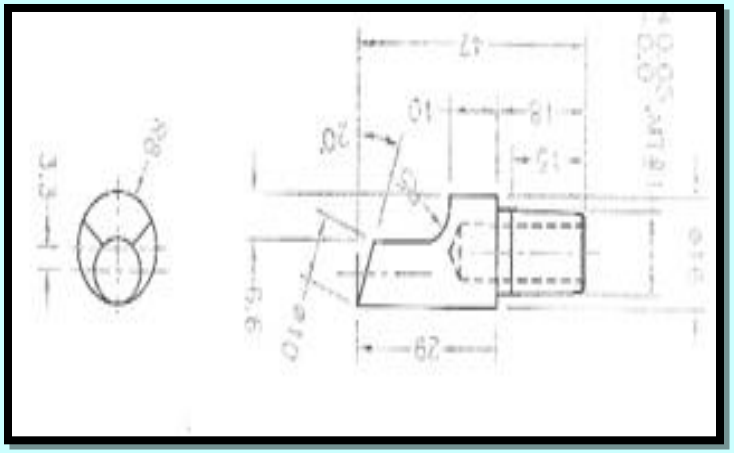

08-904

3. Understand the current situation

- Electrode replacement is after 2200 spot.

- Gun existing parameters

Tx-48	Tx-51
1. Squeeze time-25	Squeeze time- 22
2. Weld time- 14	Weld time-14
3. Hold time- 10	Hold time-12
4. Force- 300 Kgf	Force-300Kgf
5. Current- 9KA	Current- 9KA

3. Understand the current situation

Observation of process

Following are the observations during the process .

C-gun Tx.51& 48 gun holder & electrode used for spot welding of roof top at roof stage.(total 20 spots taken by this gun).

Tip becomes reddish and deforms after 5 to 6 bodies

3. Understand the current situation

Observation of process

Following are the observations during the process .

1)Mushrooming of tip is more.

2)Roof existing electrode 08-904 is not having sufficient cooling.

3)This electrode is comes in top 3 consumption items.

4)Manufacturing cost for the electrode is Rs.171.

5)Complicated design of electrode.

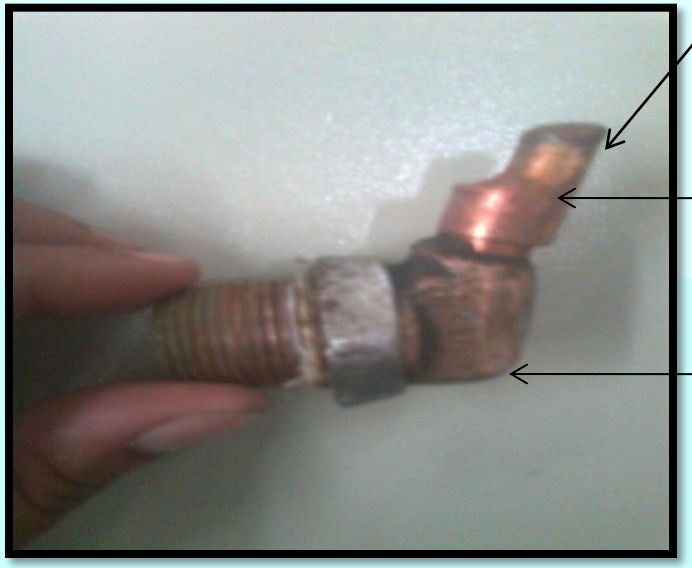

4. Select Target

Present Level:

This electrode is comes in top 3 high consumption items.(last year F-12 cost is Rs.266748,qty-1555).Electrode cost :-Rs.171 .**Avg.consumption is 150 electrode per month.**

Target:

50 % cost reduction in consumption of electrode.(annual).(**Avg.75 electrode per month) till Nov.F12**

4. Select Target

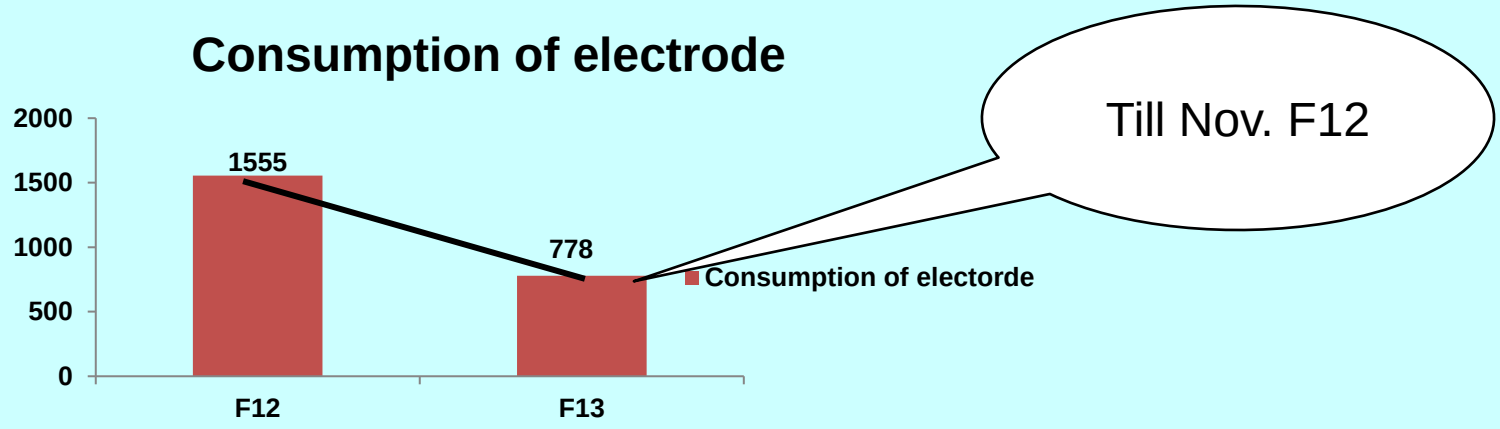

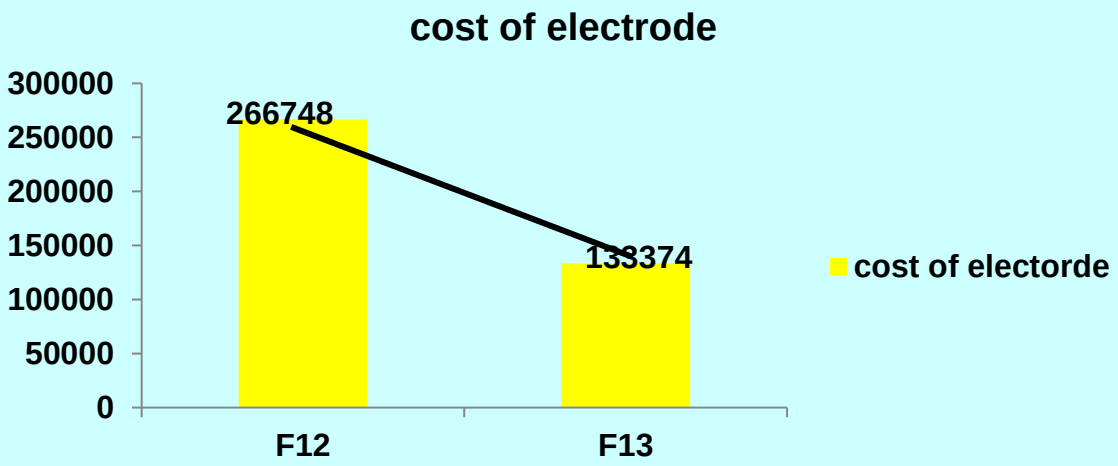

5. Analysis

5.2 Identify possible causes:

1.Material of electrode.
2. Profile of the job.
3.Cost of electrode .
4. Spot welding parameters not ok
5.Gun alignment not ok
6.Frequent tip worn out.
7. Excessive heating of tip while spotting.
8.Gun movement not easy for spot welding.
9.Material of the holder.
10.Tip dressing, tip removal procedure.
11.Manufacturing process of tip.
12.Tip heating while spotting.
13.Mushrooming of tip.
14.Tip & tip holder design.
15.Spot welding gun operating.
16.Delivery of tips.

Cause Verification

5.2 CAUSE AND EFFECT DIAGRAME

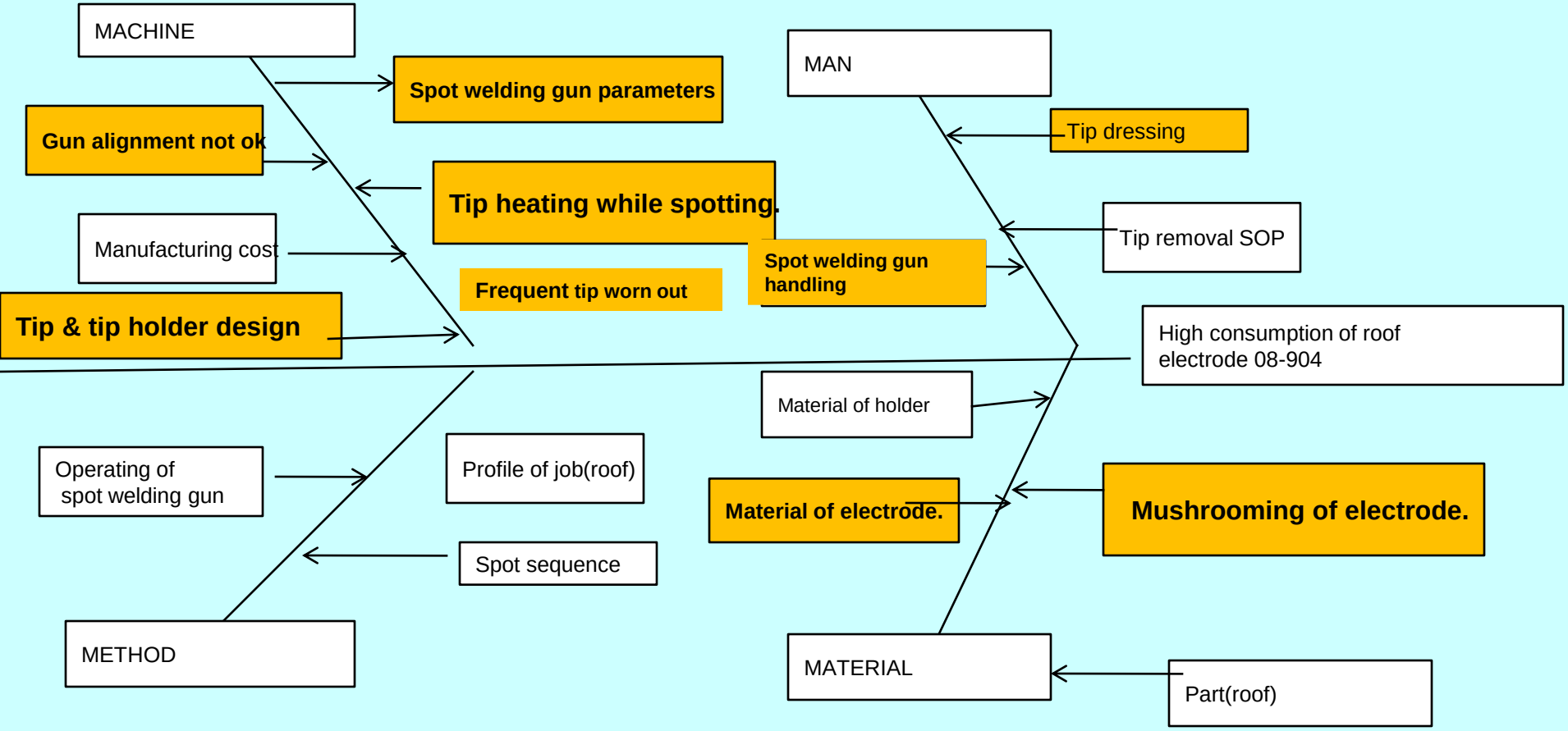

5. Analysis

5.2 Confirm the probable cause:

Sr. No	Probable Causes
1	Excessive heating of tip while spotting.
2	Tip/electrode mushrooming is more.
3	Material of electrode
4	Frequent tip worn out.
5	Frequent tip dressing.
6	Spot welding gun alignment not ok.
7	Gun movement not easy while spotting.
8	Tip & tip holder design.
9	Parameter of spot welding gun.

5.2 Confirm the probable cause:

No	Probable Cause	Testing and Observations	Conclusion
1.	Gun tip excess heating	Standards (Temperature sensor) After spotting tip temp should fall from 900 Degree to Zero degree within 10 seconds. Found uneven deformation of tip leading to more mushrooming of electrode (temperature found around 900 degree after spotting, Tip temperature not fallen to normal temp.)	**Valid**

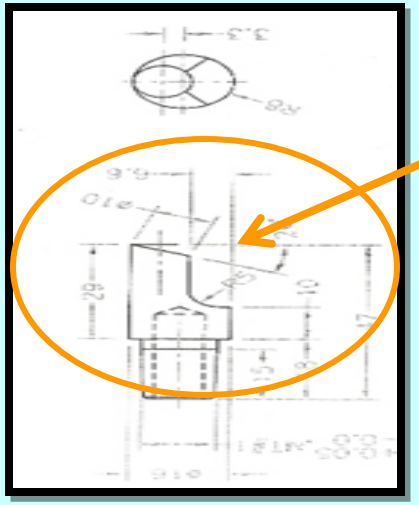

Water cooling to electrode is not up to the tip.

Before

After

5.2 Confirm the probable cause:

No	Probable Cause	Observations	Conclusion
2.	Mushrooming of electrode is more. Tip excess heating.	Found by ,visual observation Due to insufficient water cooling tip gets mushroomed more. Need to replaced frequently.	**Valid**

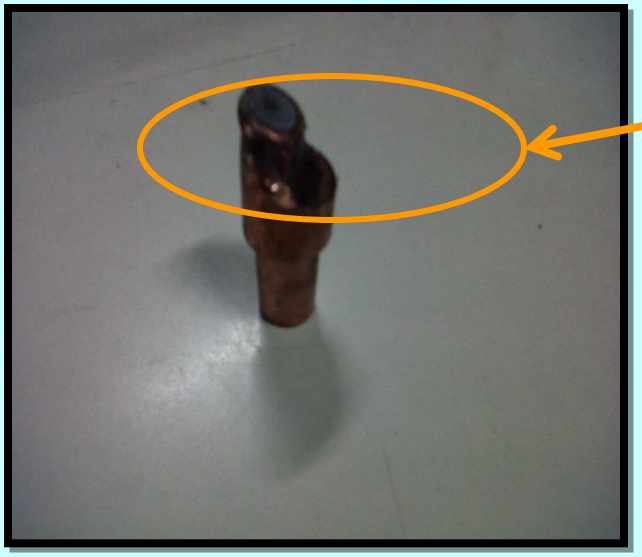

Due to less water flow till tip end electrode get more mushroomed.

5.2 Confirm the probable cause:

No	Probable Cause	Observations	Conclusion
3.	Material of electrode	**Material found ok by testing report at vendor side. All properties of material is ok.**	**invalid**

Holder report

Customer MAHINDRA & MAHINDRA LTD.

Order No.	Description	Alloy No.	Size	Q'ty	Weight
3500015 647	05-0348/M	SEAMALLOY-100	HOLDER	1.00	

Contents	Mechanical Property			Electrical Conductivity I.A.C.S % at 20 °C	Chemical Composition (wt %)						
	T.S M/mm2	Elongation %	Hardness HRB		Cu	Cr	Ti	Zr	Ni	Be	Total
Specification	55 MIN	10 MIN	92 MIN	40 MIN					1.4		
Lot No.	57	12	94	42%	Bal				1.5		

Remark :

We hereby certify that above results are true and correct in every detail.

F-QAD-010

Tip inspection report

Customer MAHINDRA & MAHINDRA LTD.

Order No.	Description	Alloy No.	Size	Q'ty	Weight
3500015 647	Electrode 08-904	SEAMALLOY-100	HOLDER	1.00	

Contents	Mechanical Property			Electrical Conductivity I.A.C.S % at 20 °C	Chemical Composition (wt %)						
	T.S M/mm2	Elongation %	Hardness HRB		Cu	Cr	Ti	Zr	Ni	Be	Total
Specification	55 MIN	10 MIN	92 MIN	40 MIN					1.4		
Lot No.	57	12	94	42%	Bal				1.5		

Remark :

We hereby certify that above results are true and correct in every detail.

F-QAD-010

5.2 Confirm the probable cause:

No	Probable Cause	Testing and Observations	Conclusion
4.	Frequent tip worn out.	Found tip is worn out frequent after 20-25 BIW,by visual observation & on prod. Operator call	**valid**
5.	Frequent tip dressing.	Due to worn out of tip tip filling or dressing require .	**Invalid**

Worn out tips

Tip filing/dressing

18.6.12	Gun no.51		Remark	No.of spots
		Difference	Tip to be repalced after	
Tip put at body count	25	25	25 bodies,tip worn out more	
Tip changed after(no.of bodies)	50			500
Tip put at body count	52	30	Tip to be repalced after	
Tip changed after(no.of bodies)	82		30 bodies.tip dressing req.	600
Tip put at body count	5		Tip to be repalced after	
Tip changed after(no.of bodies)	48	43	30 bodies.	550

5.2 Confirm the probable cause:

No	Probable Cause	Observations	Conclusion
6.	Spot welding gun alignment not ok.	**Gun alignment found ok by visual observation & from production operators also.**	**invalid**

Gun alignment found ok.

5.2 Confirm the probable cause:

No	Probable Cause	Observations	Conclusion
7.	Spot welding gun movement while spotting.	**Movement of gun on gantry & I-beam found ok ,by smooth movement of gun by production operator feel. No any hard movement of gun found.**	**invalid**

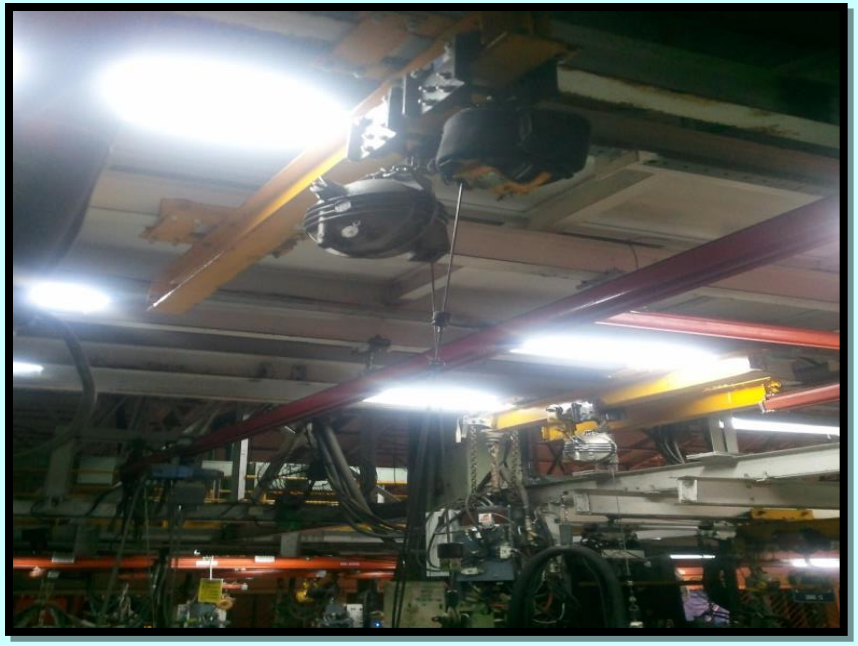

Gun movement on I-beam & gantry found ok..

5.2 Confirm the probable cause:

No	Probable Cause	Testing & Observations	Conclusion
8.	Tip & tip holder design.	Gun tip alignment got disturbed, by visual observation. Found tip 08-904 is in angle as due to profile of job(roof) ,also its holder too. Also tip alignment with moving tip got disturbed many times.	**Valid**

Due to solid tip design cooling water is not going up to the tip end. Also mushrooming is more due to insufficient cooling.

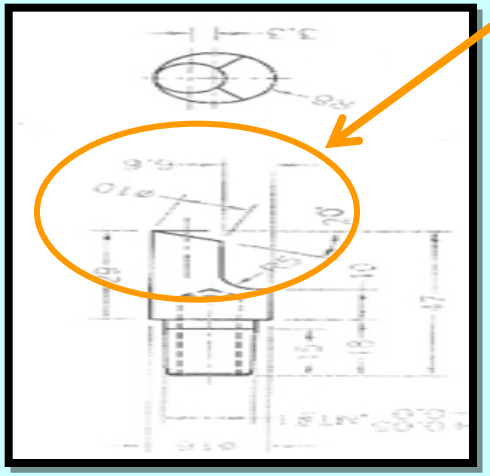

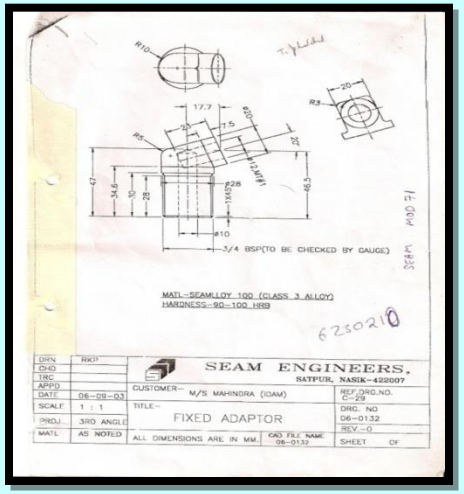

Water cooling

5.2 Confirm the probable cause:

No	Probable Cause	Testing and Observations	Conclusion
9.	Wrong parameters	Refer design parameter. Parameters found ok with respect to design parameter of both guns	**Invalid**

Gun parameters

	Tx-48			Tx-51		
		Actual	Designed		Actual	Designed
1.	Squeeze time-	25	24	Squeeze time-	22	22
2.	Weld time-	14	14	Weld time-	14	14
3.	Hold time-	10	10	Hold time-	10	10
4.	Force -	300 Kgf	300Kgf	Force-	300Kgf	300 Kgf
5.	Current-	9 KA	9 KA	Current-	9 KA	9 KA

WHY - WHY Analysis

5.3 Identify the root causes:

Sr No	Probable cause	why	why	why	Why	why
1	Gun tip/Electrode heating is more	Gun alignment not ok	Frequent tip worn out	No water circulation till tip end	Insufficient cooling to electrode	Electrode design
2.	Mushrooming of electrode is more.	Tip worn out more	No water cooling till electrode end.	Inadequate Electrode design	Electrode design	
4.	Frequent tip worn out	water circulation till tip end not sufficient .	Solid tip design.	Inadequate tip design	Tip design.	

WHY - WHY Analysis

5.3 Identify the root causes:

Sr No	Probable cause	why	why	why	Why	why
8.	Tip & tip holder design	Job profile requirement tip & tip holder design.	Inadequate /wrong holder & tip design.	Tip holder & tip design.		

6. Implement the corrective measures

Root Cause	Action Plan	Target Date	Resp	Status
1.Tip heating is more. Insufficient water cooling to the electrode	Water cooling till tip end provided, by modifying solid electrode to cap tip.	12.8.12	Rajendra	closed

Before

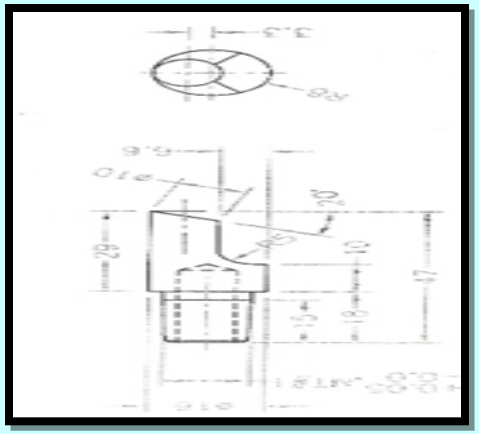

Water cooling

After

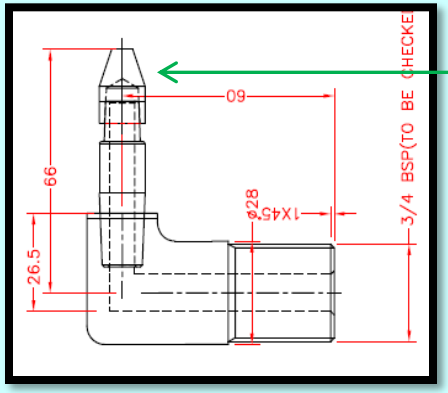

Water cooling till tip end

Water cooling till tip end

6. Implement the corrective measures

Root Cause	Action Plan	Target Date	Resp	Status
2. More mushrooming of electrode.	Gun holder & tip design to be changed Water circulation routing to be done till gun tip head	5.9.12	Vinod	Closed

Before

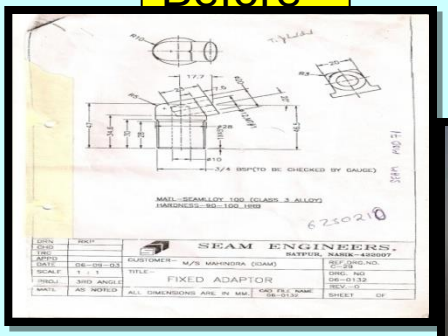

Holder

Tip

After

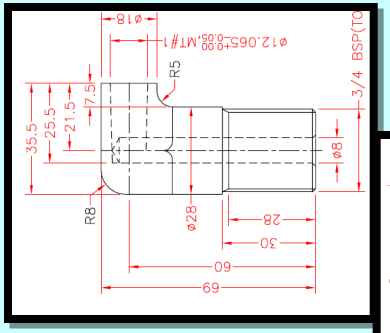

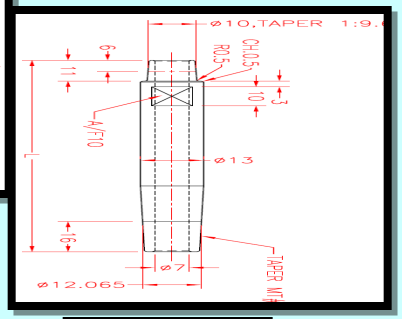

shank

Holder

Tip

6. Implement the corrective measures

Root Cause	Action Plan	Target Date	Resp	Status
4.Frequent worn out of tip/electrode.	Tip is of solid design ,we make it as cap tip for better water cooling & no frequent worn out of tip.i.e.cooling to be done till tip end.	30.8.12	Rajendra	Closed

Before

Tip design is solid, no cooling till tip end.

Tip

After

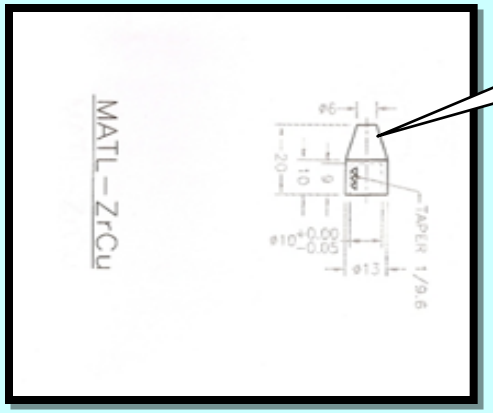

Tip design changed as cap tip, cooling till tip end.

Tip

6. Implement the corrective measures

Root Cause	Action Plan	Target Date	Resp	Status
8.Tip & tip holder design.	Gun holder & tip design to be changed Water circulation routing to be done till gun tip head	5.9.12	Vinod	Closed

Before

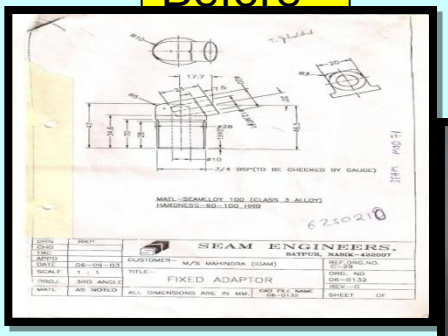

Holder

Tip

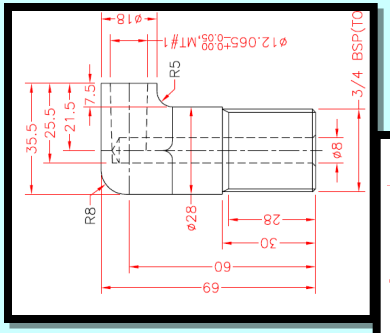

After

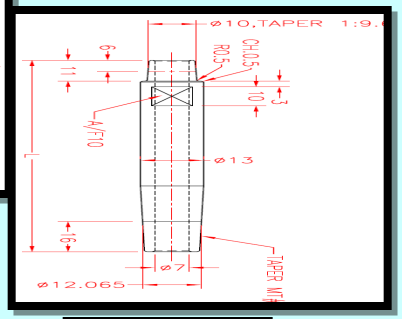

shank

Holder

Tip

7. Check & confirm the results & effects

7.1 Verify Results:

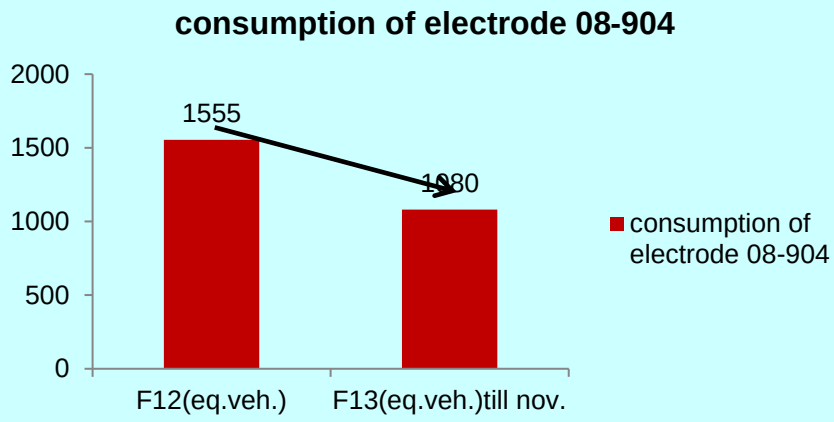

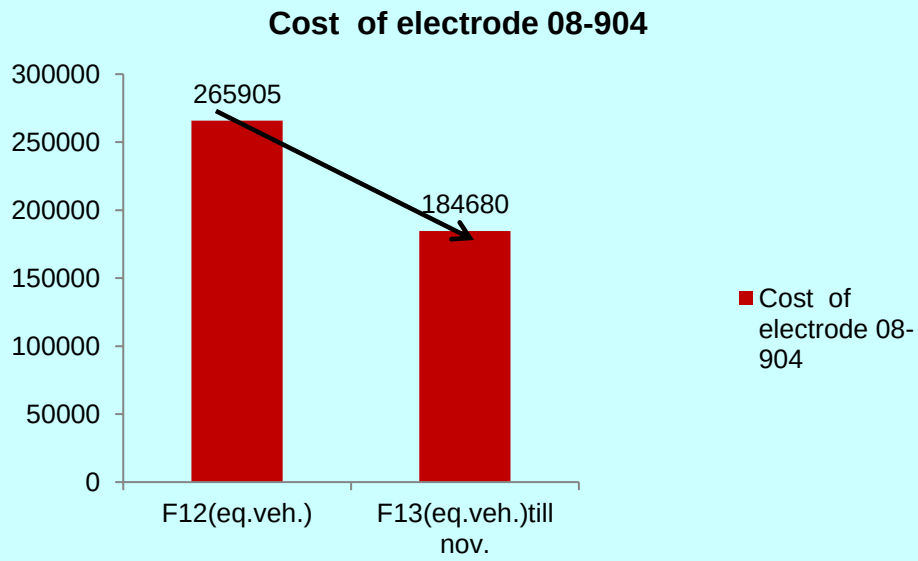

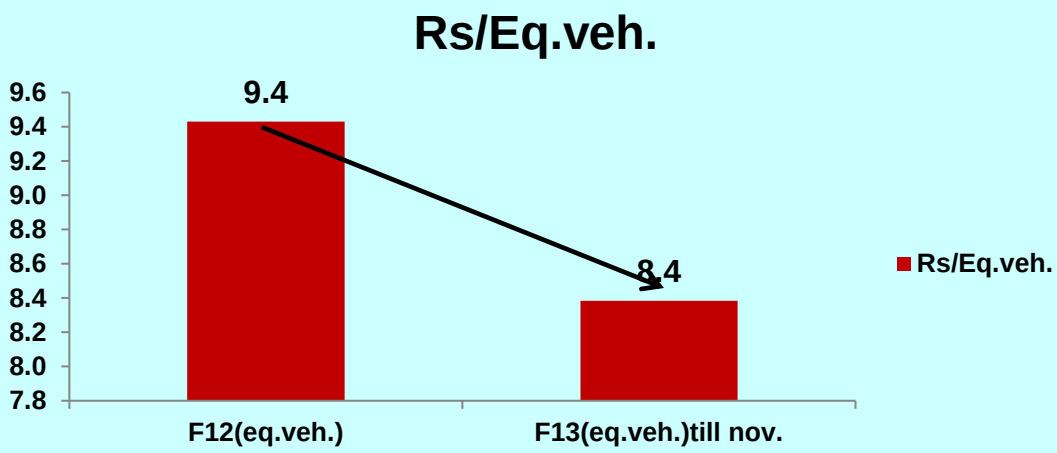

7. Check & confirm the results & effects

7.1 Verify Results:

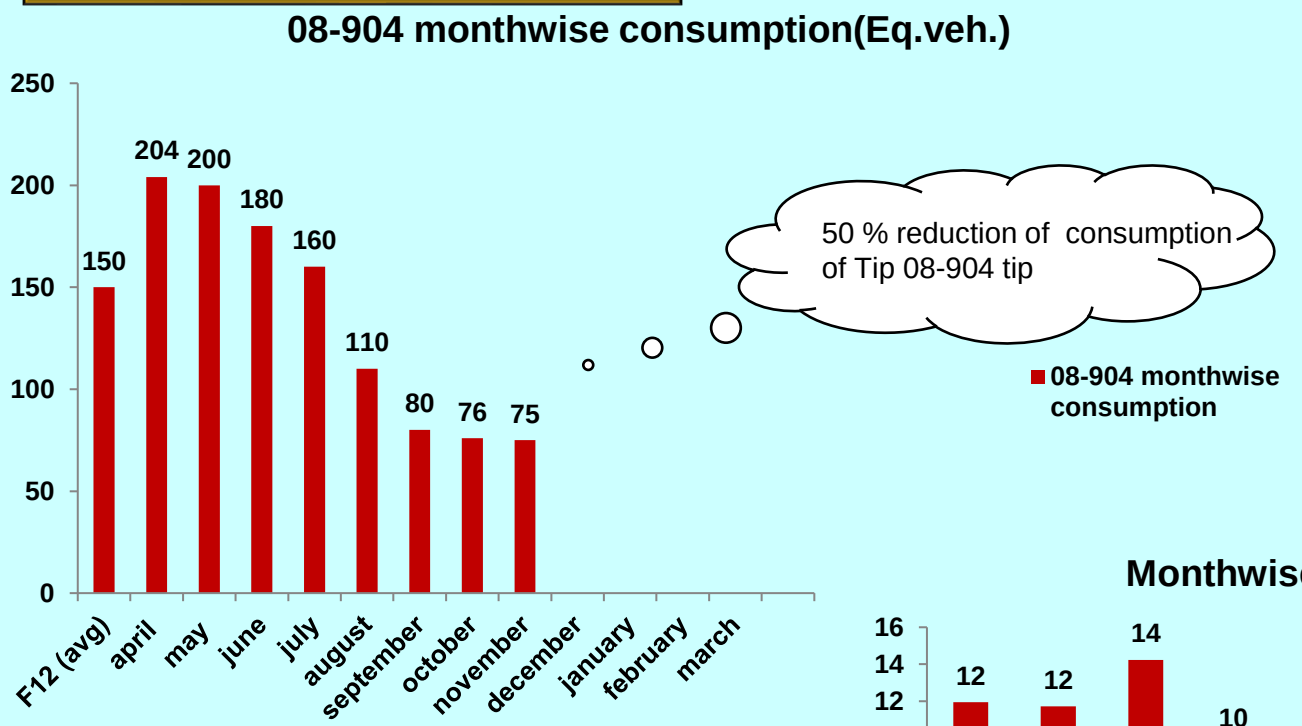

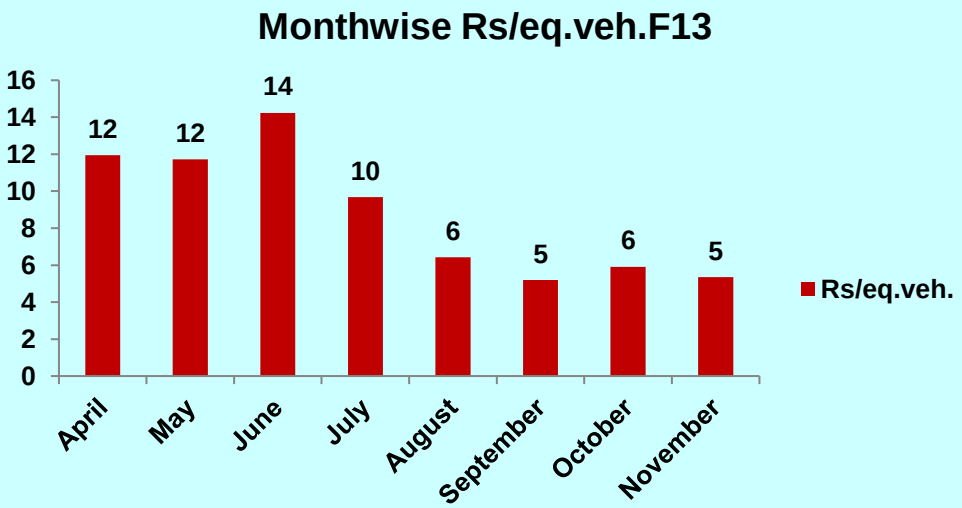

7.2 Full Scale Implementation plan:

Action Plan	Target Dt	Status
Roof holder modification done.	5.9.2012.	G
Roof tip 08-904 cap tip made.	30.8.2012.	G
For both gun tip & tip holder modification done.	25.9.2012.	G

1.**All decided actions implemented as on 25.9.2012.**

7.Check & confirm the results & effects (Cont……)

7.3 Tangible benefits:

Cost saving Benefits

	Before	After
Productivity	Tip need to be replaced after 2200 spots	Tip needs to be replaced after 1100 Spots
Quality	1.Carbon deposition on tip after few spots	1. No carbon deposition on tip due to cooling .
Cost Saving	**Rs.171 .**	**Rs.30.**

Calculation

BEFORE	
total spot	20
biw/shift	105
no.of spot /shift	2100
replaced after	2200
tip/shift	1
tips /day	2
tips/month	57
tips/year	687
cost/year	117523.636
cost of solid tip	171

AFTER	
total spot	20
biw/shift	105
no.of spot /shift	2100
replaced after	1100
tip/shift	2
tips /day	4
tips/month	115
tips/year	1375
cost/year	41236.36
cost of cap tip	30

Annualized Cost Saving =76287

7.Check & confirm the results & effects (Cont……)

7.3 Intangible benefits:

1.Tip removal & fitting made easy as per our regular tip removal process.
2.Customer satisfaction.

8. Standardization

8.1 Updation of documents:

1. Gun holder drawing Approval/certification

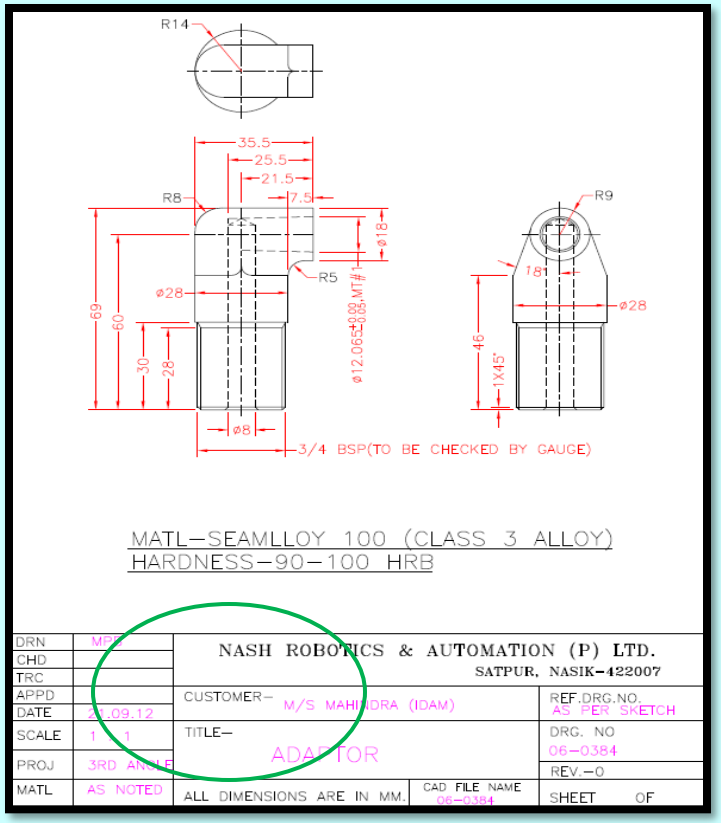

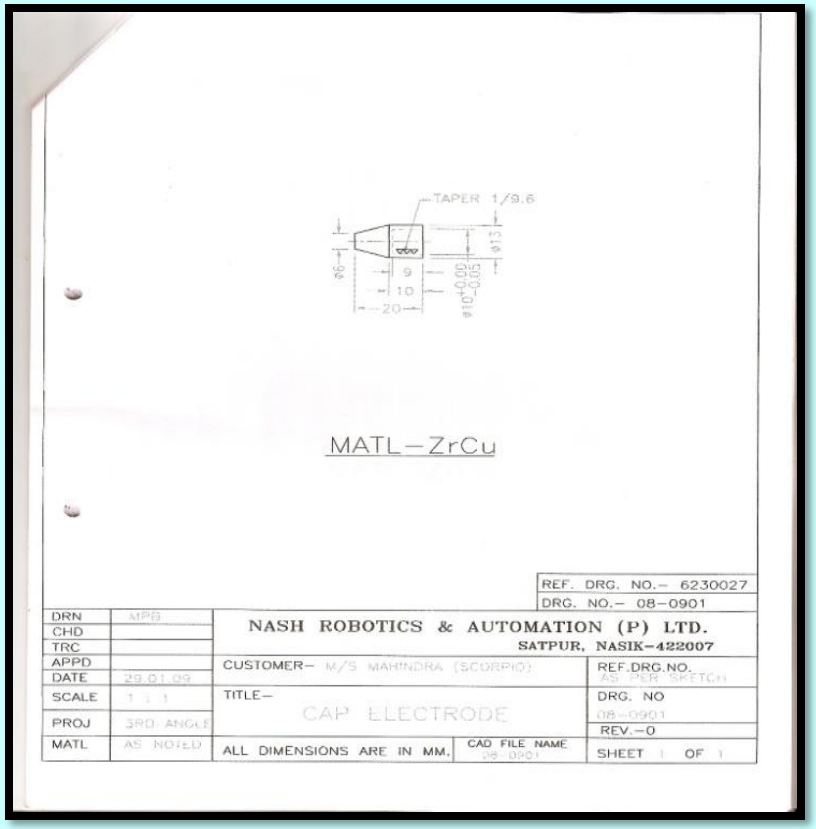

8. Standardization

8.1 Updation of documents:

1. Point added in pm check sheet.

8. Standardization

8.2 Training:

1. OPL for new tip replacement.(It is regular tip replacement procedure).

8.3 Additional Audit / Check

. NA

9. Summarize & Plan future actions

9.1 Conclusion:

Consumption of electrode 08-904 is being reduced by 50 % by modifying the gun holder & electrode design ,which shows that water circulation or water cooling is so important phenomena for spot welding guns.

9.2 Horizontal Deployment:

1. At 4 location in sc/dc shop.(roof stage)

9.3 Lessons Learnt:

Things Gone Wrong : Wrong holder design was done during development.

Things Gone Right : we challenged the design of holder and got successful this shows anything can be challenged

THANK YOU !!!